*Institutional Arrangements and Equilibrium In Multidimensional Voting Models**

Kenneth A. Shepsle, *Washington University*

Nearly thirty years of research on social choice has produced a large body of theoretical results. The underlying structure of the models that have generated these results is highly atomistic and institutionally sparse. While attention has been devoted to the mechanisms by which individual revealed preferences are aggregated into a social choice, rarely are other aspects of institutional arrangements treated endogenously. In this paper institutional properties are given more prominence. In particular, I focus on three aspects of organization: (1) a division-of-labor arrangement called a *committee system*; (2) a specialization-of-labor system called a *jurisdictional arrangement*; and (3) a monitoring mechanism by which a parent organization constrains the autonomy of its subunits called an *amendment control rule*. The conceptual language has a legislative flavor but, in fact, the concepts are broadly applicable to diverse organizational forms. The principal thrust of this paper is a demonstration of the ways institutional arrangements may conspire with the preferences of individuals to produce structure-induced equilibrium.

Theories of social choice are concerned with the operating characteristics and equilibrium properties of collective decision-making arrangements. At a very general level, as exemplified in the famous work of Arrow (1963), we have failed to understand how collective decision-making arrangements operate because they lack equilibrium properties. Indeed, a fundamental lesson of his inquiry is that an institutional arrangement lacking some (perhaps distasteful) constitutional restrictions or failing that, a basic value consensus, is *inherently* inexplicable in its operation.

In light of Arrow's Possibility Theorem, one major direction of

*The author is Professor of Political Science and Research Associate of the Center for the Study of American Business, Washington University. Earlier versions of this paper were presented at the annual meetings of the American Economic Association, New York, December, 1977 and the Public Choice Society, New Orleans, March, 1978. The author is grateful to the Carthage Foundation for sponsoring this research and to Professors John Aldrich of Michigan State University, John Ferejohn and Morris Fiorina of California Institute of Technology, Howard Rosenthal of Carnegie-Mellon University, and Robert Parks, Trout Rader, Barbara Salert, and Barry Weingast of Washington University for useful conversations and comments.

American Journal of Political Science, Vol. 23, No. 1, February 1979
 0026-3397/79/010027-33$02.55

scholarship has sought to isolate the characteristics of that value consensus. Represented most elegantly by the theorem of Sen (1966) and broadly summarized in Sen (1970), Pattanaik (1971), and Fishburn (1973), this literature focuses on the properties of a collection of individual preference orderings that induce equilibrium states in an aggregation mechanism. It turns out, however, that in at least one interesting choice environment—that in which the alternatives are a compact subset of a multidimensional Euclidean space—the restrictions on preferences are extraordinarily severe (Kramer, 1973). Related research on majority rule and other binary decision rules in multidimensional alternative spaces has produced a similar conclusion (Plott, 1967; Sloss, 1973; McKelvey and Wendell, 1976; Slutsky, 1977b; Matthews, 1977). In all of these works, in order for equilibrium to obtain, preferences must exhibit an extremely precise symmetry which is unlikely to emerge in natural decision-making settings and, even if it should, is extremely sensitive to slight perturbations (McKelvey, 1977; Cohen, 1977). It now appears that further characterizations of the value consensus required for choice equilibrium will, in essence, consist of "mopping up" exercises. Equilibrium of a social choice process *depends* on the configuration of preferences but can only rarely be *guaranteed* by that configuration. We must search elsewhere to understand how collective choices are arrived at.

In recognition of this theoretical cul de sac, some recent efforts have been made to model institutional arrangements more directly. As Zeckhauser and Weinstein (1974, p. 664) note,

> the relatively infrequent appearance of [disequilibrium in the form of] cyclical majorities in functioning legislatures cannot be explained by some geometric property of individuals' preferences . . . . [M]atters such as procedural rules and institutional constraints provide key insights into real-world social choice phenomena.

Two such efforts, those of Slutsky (1975, 1977a) and Denzau and Parks (1973), attempt to provide the structure for a political economy in which tax prices and levels for public goods, and after-tax income, prices, and quantities for private goods are all in equilibrium (in the sense that public sector levels are majority winners, the public budget is balanced, private goods markets are cleared, profits maximized, and no citizen bankrupted). To circumvent the difficulties surrounding public sector voting equilibrium, they resort to restrictions on the domain of public sector choices. Space does not permit me to review their work more fully here, so let me only note that their respective general equilibrium orientations tend to submerge matters of institutional structure in the public sector, matters I wish

to make more prominent in this paper. Therefore, in what follows, I focus exclusively on the internal structure of a generic collective decision-making institution. While this institution looks very much like a legislature, I shall argue below that it shares many interesting characteristics in common with other kinds of decision-making arrangements. The basic point of this paper is that institutional structure—in the form of rules of jurisdiction and amendment control—has an important independent impact on the existence of equilibrium and, together with the distribution of preferences, co-determines the characteristics of the equilibrium state(s) of collective choice processes.

1. Motivation, Notation, Examples

We consider a generic decision-making institution composed of n members, $N = \{1, 2, \ldots, n\}$ and a binary choice procedure $C(x, y)$ that determines choices between pairs of alternatives. The space of alternatives is a compact, convex subset R^m of m-dimensional Euclidean space. Each $i \epsilon N$ has a complete, transitive, binary preference relation, $\geq_i$, defined on all $x, y \in R^m$, and represented by an ordinal utility function u_i: $R^m \rightarrow R$ which is maximized on R^m at $\bar{x}^i = (\bar{x}^i_1, \ldots, \bar{x}^i_m)$.

Winners

A point $x \in R^m$ is said to be a *global binary winner* if and only if $x \in \bigcap_{y \in R^m} C(x, y)$. More generally, x is said to be an *A- restricted winner* if and only if $x \in \bigcap_{y \in A} C(x, y)$, for some $A \subseteq R^m$. Clearly global winners are A- restricted winners under the most demanding domain requirement—$A = R^m$. Shortly we give a substantive interpretation to A, relating it explicitly to institutional arrangements. First, however, we define the institution's choice function, $C(x, y)$.

Throughout this paper we focus on decisive *majority* coalitions, though not necessarily of the pure majority rule form. With some changes it may be possible to generalize results to other collections of decisive coalitions. For $B \subseteq N$ let $|B|$ represent the number of $i \in B$ and let $|x \geq y| = |\{i | x \geq_i y\}|$. The following A- restricted winners are defined.[1]

[1] These definitions are adapted from McKelvey and Wendell (1976).

DEFINITION:

Strong Majority Condorcet: $E_1 = \{x \epsilon A \mid \forall y \epsilon A,\ y \neq x,$
(Weak) (E_2) $|x > y| > \frac{n}{2}\}$
$(\geq)$

Strong Plurality Condorcet: $E_3 = \{x \epsilon A \mid \forall y \epsilon A,\ y \neq x,\ |x > y|$
(Weak) (E_4) $> |y > x|\}$
$(\geq)$

Strong Majority Core $E_5 = \{x \epsilon A \mid \forall y \epsilon A,\ |y > x| < \frac{n}{2}\}$
(Weak) (E_6) $(\leq)$

It is clear that a strong winner of each type is also a weak winner of that that type — $E_1 \rightarrow E_2$, $E_3 \rightarrow E_4$, $E_5 \rightarrow E_6$. Moreover, $E_1 \rightarrow E_3 \rightarrow E_5$ $(E_2 \rightarrow E_4 \rightarrow E_6)$. For $A = R^m$, McKelvey and Wendell (1976, Theorem 1.1) demonstrate that whenever $\underset{i}{\geq}$ is strictly convex—$x \neq y$ and $y \underset{i}{\geq} x$ imply $[t\,x + (1\text{-}t)y] >_i x$ for any $t \epsilon (0, 1)$—all strong (weak) winner types are equivalent:

$$E_s = E_1 = E_3 = E_5$$
$$E_w = E_2 = E_4 = E_6$$

More generally, for A-restricted winners we have

THEOREM 1.1: *If $\geq_i$ is strictly convex and A a convex set, then $E_1 = E_3 = E_5$ $(E_2 = E_4 = E_6)$.*

PROOF: We already have $E_1 \rightarrow E_3 \rightarrow E_5$ from the definitions, so demonstrating that $E_5 \rightarrow E_1$ establishes the result. Suppose the contrary—$x \epsilon E_5$ but $x \notin E_1$. $x \notin E_1$ implies there exists a $y \epsilon A$ with $|x > y| \leq \frac{n}{2}$. Thus, $|y \geq x| \geq \frac{n}{2}$ Since A is convex, pick a $y' \epsilon A$ with $y' = t\,x + (1\text{-}t)y$, $t \epsilon (0,1)$. From the strict convexity of $\geq_i$, $y \geq_i x$ implies $y' >_i x$. Thus $|y' > x| \geq \frac{n}{2}$ and $x \notin E_5$, a contradiction. The proof for weak winners is developed in a similar fashion. Q.E.D.

Notice that the equivalence of the strong (weak) winners need not obtain if A is not convex, for then it would only be by accident that a point y' ϵA with the appropriate properties exists.[2]

[2] Notice also for choice processes in which simple majority coalitions are not decisive that strong (weak) winners are not equivalent.

Jurisdictional Restrictions

The focus of this paper (and the main departure from traditional social choice theory) is on the consequences of constraints on contests between competing proposals. Restrictions on contests derive from the rules by which the decision-making agenda is constructed and are often most conspicious in the structural arrangements into which decision-making groups constitute themselves. Particularly noteworthy in this respect are the mechanisms of decentralization that are employed to expedite complex decision making. Examples abound: a committee system in a legislature; a collection of schools, colleges, and departments in a university; a system of divisions in a firm; an arrangement of bureaus in an agency; the "separation of powers" within a national government; a federal organization for layers of government; and so on.

What distinguishes these mechanisms of decentralization is that they are division-of-labor instruments. The different committees of a legislature or departments of a university have different (though not necessarily disjoint) domains of responsibility or jurisdictions. Of course, the idea of *jurisdiction* is quite independent of division-of-labor structural arrangements. The formal agenda of an ordinary business meeting, with its separate categories of activity—old business, new business, officers' reports, etc., suggests a separation of activities into jurisdictions without a structural division-of-labor. While a matter of new business may not be brought up (i.e. is out of order) during the session on old business and vice versa, the entire membership of the organization participates in both deliberations.

In order to keep the ideas of jurisdiction and division-of-labor distinct, we define two finite coverings.[3]

DEFINITION: *Call the family of sets* $C = \{C_j\}$ *a committee system if it covers* $N = \{1,2, \ldots, n\}$

Example 1.1 (Committee-of-the-Whole): Let the family of sets consist of a single set $C = \{N\}$. This is known as the committee-of-the-whole and, in traditional social choice theory, is the main structural arrangement, usually labeled committee, society, electorate, etc. It is a trivial partition of N.

[3] A *finite covering* of a set B is a finite collection $\beta = \{\beta_j\}$, where $\cup_j \beta_j = B$. If, in addition, $\beta_i \cap \beta_j = \phi$ for all β_i, $\beta_j \in \beta$, then β is a *partition* of B. Technically, $\cup_j \beta_j \supseteq B$ is all that is required for β to cover B, but this technically is of no consequence in what follows.

Example 1.2 (Legislative parties): Let the family of sets $C = \{C_j\}$ be the party groupings of a legislature. The family of legislative parties is normally a partition inasmuch as each legislator affiliates with one and only one legislative party.

Example 1.3 (Committee system of the U.S. House of Representatives): Let the family $C = \{C_j\}$ represent the collection of standing committees of the U.S. House of Representatives. Here C is a covering but not a partition since most $i \in N$ serve on more than one standing committee.

A committee system, as these examples illustrate, is a division-of-labor arrangement that distributes members to structural decision-making subunits of the organization. The notion of jurisdiction is defined next.

DEFINITION: *Let $E = \{e_1, \ldots, e_m\}$ be an orthogonal basis for R^m, where e_i is the unit vector for the ith dimension. Call the family of sets $J = \{J_k\}$ a jurisdictional arrangement if it covers E.*

Thus each jurisdiction $J_k \in J$ is a subspace of R^m. Three examples in R^3 will illustrate the range of alternatives.

Example 1.4 (Global Jurisdiction): Let the family of sets consist of a single set $J = \{\{e_1,e_2,e_3\}\}$. The space of alternatives, R^3, falls entirely within a single jurisdiction. Together with Example 1.1, this arrangement characterizes the context of social choice that is prevalent in the literature.

Example 1.5 (Simple Jurisdictions): Let $J = \{J_1,J_2,J_3\}$ with $J_k = \{e_k\}$. Here each jurisdiction is simply a single dimension of R^3.

Example 1.6 (Overlaping Jurisdictions): Let $J = \{J_1, J_2\}$ with $J_1 = \{e_1,e_2\}$, $J_2 = \{e_2,e_3\}$. This jurisdictional arrangement is descriptive of arrangements in the U.S. House and U.S. Senate, where jurisdictional overlaps of committees are considerable.

In the remainder of this paper, attention is devoted to the case of *simple jurisdictions* with comparisons made between committee-of-the-whole decision arrangements and arbitrary committee systems. The existence of equilibrium will be established in each case with differences between the equilibria noted.

For an arbitrary committee system C and jurisdictional arrangement J, the correspondence $f : C \rightarrow J$ associates (sets of) jurisdiction(s) with the $C_j \in C$. Several points are in order. First, each $C_j \in C$ is mapped into at least one $J_k \in J$. It then has jurisdiction over the dimensions in J_k.

Thus if some subset of the $i \in N$ comprises C_j and f takes C_j to $J_k = \{e_1,e_2\}$ then C_j has jurisdiction over the points in R^m spanned by e_1 and e_2; they are of the form $(x_1,x_2,x^\circ_3, \ldots, x^\circ_m)$ where the x°_i are components of some predetermined status quo (see below). Second, the correspondence permits a $C_j \in C$ to be associated with several J_k's. One of special interest to us is the situation involving the committee-of-the-whole and simple jurisdictions. There $C_j = N$ and $J = \{\{e_1\}, \{e_2\}, \ldots, \{e_m\}\}$. The points in C_j's jurisdiction are of the form $(x_1,x^\circ_2, \ldots, x^\circ_m)$ or $(x^\circ_1,x_2,x^\circ, \ldots, x^\circ_m)$ or ... or $(x^\circ_1,x^\circ_2, \ldots, x^\circ_{m-1}, x_m)$—points that alter the status quo in at most one dimension. Contrast this arrangement to the one considered in traditional social choice theory in which $J = \{\{e_1,e_2, \ldots, e_m\}\}$: there, all points in R^m fall in C_j's jurisdiction. Third, it is possible for a particular $e_i \in E$ to be contained only in J_k for which $f^{-1}(J_k)$ is undefined. That is, some dimensions of the choice space may be contained in jurisdictions associated with no $C_j \in C$. Short of revolution or more peaceful constitutional change, the status quo level on this dimension is immutable.

The Status Quo and the Organizational Agenda

The prevailing social state is a point $x^\circ \in R^m$. The status quo represents the cumulation of historical decisions that has brought the organization to x°; it characterizes the current level on each of the m dimensions of the choice space. The organizational agenda for changes in x° is controlled by the $C_j \in C$ and is channeled by jurisdictional arrangements. The set of feasible changes in x° is the set of points that alter x° in no more than one jurisdiction:

> DEFINITION: *A proposal is a change in x° restricted to a single jurisdiction. The set of proposals is* $P = \{x | x = x^\circ + \sum_{i \in I} \lambda_i e_i, I \subseteq J_k$ *for some* $J_k \in J\} \subseteq R^m$.

Committees may recommend changes in x° to the parent organization from among the proposals falling within their assigned jurisdictions. Committees, in this view, are instruments that generate proposed changes. Their actions are constrained by their respective jurisdictions and their own internal decision-making rules.

Amendment Control

We have defined $f(C_j)$ as the dimensions constituting the jurisdiction

of $C_j \in C$. Let $g(C_j)$ represent the set of proposals available to C_j when the status quo is x°:

$$g(C_j) = \{x | x = x^\circ + \Sigma_i \lambda_i e_i,\ e_i \in f(C_j)\}$$

Suppose now that C_j proposes some $x \in g\ (C_j)$ to the parent body.[4]

DEFINITION: *For any proposal $x \in g\ (C_j)$, the set $M(x) \subseteq R^m$ consists of the modifications N may make in x. $M(x)$ is said to be an amendment control rule.*

The idea here is the following: C_j proposes some $x \in g\ (C_j)$ to the parent body; before x is compared to x° it may be modified by N; either x or some $x' \in M(x)$ is then compared to x°.

An amendment control rule represents the extent to which an organization can monitor and change the proposals of its subunits. In some instances, a parent organization is little more than a holding company for its subunits, voting the latter's recommendations "up" or "down":

DEFINITION: *A committee's proposal is said to be governed by the closed rule if $M(x) = \emptyset$ for all $x \in g(C_j)$.*

Example 1.7 (Romer and Rosenthal): Romer and Rosenthal construct a model in which a group, called the *agenda setter*, proposes an alternative—a change in the status quo—which is either accepted or or rejected by the collectivity. They have in mind decision settings illustrated by school tax choices in many school districts. There the agenda setter is usually the school board which proposes a property tax rate. By referendum the citizens of the school district decide whether to adopt the recommendation of the school board; if they do not, then the rate to which the tax reverts is usually constitutionally-specified.[5]

Example 1.8 (Tax Legislation in the U.S. House): Though by no means a hard and fast rule, it has been the usual practice in the U.S. House to provide legislative proposals of the Ways and Means Committee with a closed rule. No modifications, unless acceptable to a committee majority, are permitted.

The closed rule is obviously the most restrictive constraint on the

[4] For the moment we defer consideration of the internal procedure by which C_j arrives at x as its proposal.

[5] It may be the prevailing rate or some other predetermined rate. In Oregon, Romer and Rosenthal report, if a school tax rate proposal fails, then it reverts to some low tax rate that generates only the level of revenue mandated by earlier statute.

discretion of the parent organization to modify committee proposals. At the other extreme there is the open rule:

DEFINITION: *A committee's proposal is said to be governed by the open rule if* $M(x) = R^m$ *for all* $x \in g\ (C_j)$.

Example 1.9 (U.S. Senate Riders): The rules of procedure in the U.S. Senate permit the modification of proposals through the addition of riders. As a consequence, a major piece of legislation, e.g., the extension of the Voting Rights Act, may be tagged on as a rider to a fairly innocuous bill, e.g., a District of Columbia Public Library authorization.

Between the open and the closed rule lie alternative amendment control rules which may be partially ordered by set inclusion. One that deserves special distinction is that of germaneness:

DEFINITION: *A committee's proposal is said to be governed by a jurisdictional germaneness rule if* $M(x) = \{x' | x'_i = x_i^\circ \text{ if } e_i \notin f(C_j)\}$.

The jurisdictional germaneness rule permits amendments of $x \in g(C_j)$ only along those dimensions that fall in the jurisdiction of the committee proposing x. A slightly different rule of relevancy is the following.

DEFINITION: *A committee's proposal is said to be governed by a proposal germaneness rule if* $M(x) = \{x' | x_i' = x_i^\circ \text{ if } x_i = x_i^\circ\}$.

If jurisdictions are simple (example 1.5), then proposal germaneness and jurisdictional germaneness are equal; otherwise proposal germaneness is a proper subset of jurisdictional germaneness. For example, if $f(C_j) = \{e_1, e_2\}$ and C_j proposes $x = (x_1, x^\circ_2, x^\circ_3, \ldots, x^\circ_m)$—i.e., only a change in the first of C_j's two dimensions — then jurisdictional germaneness entails $M(x) = \{x'/x' = x^\circ + \lambda_1 e_1 + \lambda_2 e_2\}$, whereas proposal germaneness requires $M(x) = \{x'/x' = x^\circ + \lambda_1 e_1\}$. In effect, germaneness rules are open rules restricted either to the dimensions of C_j's jurisdiction or to the dimensions on which C_j's proposal alters x°.

2. Structure-Induced and Preference-Induced Equilibrium

We have, to this point, sought to characterize some salient aspects of organization, namely structural and jurisdictional decentralization. To summarize briefly, an institutional choice situation is described by

(1) a status quo, $x^\circ \in R^m$;
(2) a covering $C = \{C_j\}$ on the set of institutional actors;

(3) a covering $J = \{J_k\}$ on the choice space R^m, describing the jurisdictional constraints on challenges to x°;
(4) a correspondence, f, mapping elements of C to (subsets of) elements of J; and
(5) an amendment control rule, $M(x)$, defined for $x \in g\ (C_j)$, describing the alternatives against which N may compare any proposal made by a $C_j \in C$.

In this section a model of organization possessing these characteristics is offered and its equilibrium states defined.

DEFINITION: *A proposal $x \in R^m$ is called a replacement for x° if*
(i) $x \in g\ (C_j)$ *for some* $C_j \in C$
(ii) $x = C_j\,(x,x^\circ)$
(iii) $x \in C\,(x,x')$ *for all* $x' \in M(x)$, *and*
(iv) $x = C\,(x,x^\circ)$ **(2.1)**

In order to replace x°, a proposal must, first, be *feasible* in the sense of (i). It is in this sense that jurisdictional arrangements channel (constrain) change. Letting $C_j\ (\cdot,\cdot)$ be a binary choice function for C_j, (ii) requires that proposal $x \in g\ (C_j)$ be preferred to x° by a decisive coalition in C_j. Thus, not only do jurisdictional arrangements *channel* proposals; they empower *veto groups* as well. (iii) requires that x surivive when compared to all admissible alterations $x' \in M(x)$; that is, x must be a maximal element of $\{x\} \bigcup M\ (x)$. Finally, by (iv), x must be preferred to x° by a decisive subset of N.[6]

This suggests the following equilibrium notions:

DEFINITION: *The status quo x° is vulnerable if there exists a replacement for it or if there exists an $x \in g\ (C_j) \cap C_j\ (x,x^\circ)$ and an $x' \in M\ (x)$ with $x' \in C\ (x',x) \cap C(x',x^\circ)$.*

That, x° is vulnerable if there is a point that dominates it in the sense of (i)—(iv) above or if there is a proposal of some C_j an amended version of which dominates it.

DEFINITION: *The status quo x° is a structure induced equilibrium if and only if it is invulnerable.*

[6] Throughout, the assumption of *sincere behavior* is maintained. When called to make a choice, each $i \in N$ consults $\geq_i$ and chooses in a manner consistent with it. By immediate implication, if x^0 is not a maximal element of $g(C_j)$ for some C_j, and if the maximal set of $g(C_j)$ is nonempty, then a proposal by C_j is forthcoming.

By a somewhat circuitous route, it may be shown that a structure-induced equilibrium is a particular form of A-restricted winner defined in section 1. It is not particularly instructive to dwell on these details except to note the contrast between a structure-induced equilibrium and a global binary winner:

DEFINITION: *The status quo x° is a preference-induced equilibrium if and only if it is a global binary winner*—$x^\circ \in \bigcap_{x \in R^m} C\ (x,x^\circ)$

THEOREM 2.1: *If x° is a preference-induced equilibrium then it is a structure-induced equilibrium, but not the converse.*

Proof: x° a preference-induced equilibrium $\rightarrow x^\circ \in \bigcap_{x \in R^m} C(x,x^\circ) \rightarrow x^\circ \in C(x,x^\circ)$ for any $x \in C_j\ (x,x^\circ)$ and $x^\circ \in C(x',x^\circ)$ for any $x' \in M(x)$ for any $x \in C_j(x,x^\circ) \rightarrow x^\circ$ invulnerable $\rightarrow x^\circ$ a structure-induced equilibrium. The converse fails in general since there can be a structure-induced equilibrium x° and another point x for which $x = C(x,x^\circ)$ but $x^\circ \in g\ (C_j)$ for no C_j. Q.E.D.

EXAMPLE 2.1: In R^3, suppose $N = \{1, 2, 3\}$ with utility maxima, respectively, at (1, 0, 0), (0, 1, 0), (0, 0, 1) and spherical indifference loci. The Pareto optimal surface is the triangle connecting these points (see Figure 1). It is easy to show that, for $C(\cdot\ ,\ \cdot)$ the simple majority rule, no preference-induced equilibrium exists. Consider now $x^\circ = (0, 0, 0)$, a jurisdictional covering $J = \{\{e_1\},\{e_2\},\{e_3\}\}$, the committee-of-the-whole —$C = \{N\}$, and a germaneness rule to amendments. The point x° is a structure-induced equilibrium since all proposals (and amendments) are of the form $x^\circ + \lambda_i e_i$ and, for any such proposal with $\lambda_i \neq 0$, at least two individuals prefer x°. That is, x° is preferred by a majority to all proposals of the form $(x, 0, 0)$, $(0, x, 0)$ or $(0, 0, x)$. Interestingly there exist points on the shaded triangle unanimously preferred to x°, but jurisdictional constraints and amendment rules prohibit their consideration. If, instead of (0, 0, 1), 3's ideal point were $(t, 1\text{-}t, 0)$, $t \in [0, 1]$, then that point, a convex combination of the ideal points of 1 and 2, would be a preference-induced equilibrium and, by Theorem 2.1, a structure-induced equilibrium as well.

FIGURE 1

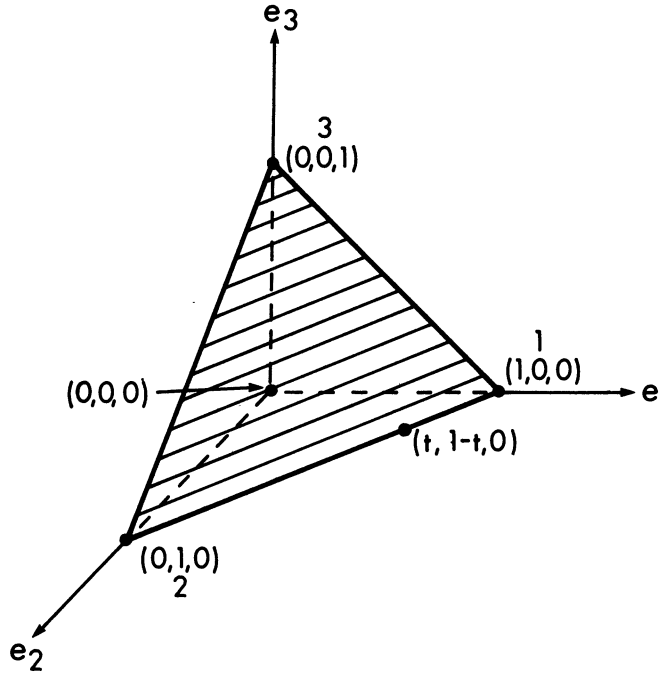

3. Simple Jurisdictions and Germaneness: Conditions for Equilibrium

The main focus is on a jurisdictional scheme $J = \{ \{e_1\}, \{e_2\}, \ldots, \{e_m\} \}$ of single-dimensional jurisdictions and the germaneness rule defined in section 1. The particular committee system remains implicit for now. The following definitions and lemma are useful for the main results of this section.

DEFINITION: *For status quo x° and jurisdiction e_j, let the induced ideal point in the jth direction for $i \in N$ be $x^{*i} = (x_1^{*i}, \ldots, x_m^{*i})$ where $x_k^{*i} = x_k^\circ$, $k \neq j$, and $u_i(x^{*i}) = \max_j [u_i(x_1^\circ, \ldots, x_j, \ldots, x^\circ_m)]$. More generally, x^{*i} is the induced ideal point on an arbitrary set X if $u_i(x)$ is maximized on X at $x = x^{*i}$.*

DEFINITION: *A utility function $u_i(x)$* is strictly quasi-concave if *and only if, for $x \neq y$, $u_i(x) \geq u_i(y) \rightarrow u_i(x') > u_i(y)$ for any $x' = \lambda x + (1\text{-}\lambda)y$, $\lambda \in (0, 1)$.*

DEFINITION: *Let* $X = \{x|x = \lambda y + (1\text{-}\lambda)z,\ y,\ z \in R^m,\ \lambda \in [0,1]\}$ *be the line connecting arbitrary points y and z. A preference representation on X is said to be single-peaked if and only if, for all* $x \in X$, $x \neq x^{*i}$, $u_i\ [\alpha\ x + (1\text{-}\alpha)\ x^{*i}] > u_i\ [\beta\ x + (1\text{-}\beta)\ x^{*i}]$ *whenever* $0 \leq \alpha < \beta \leq 1$ *and* x^{*i} *is the induced ideal point on X.*

LEMMA 3.1: *If* $u_i : R^m \rightarrow R$ *is strictly quasi-concave and continuous for* $i \in N$, *then the preference representation for i on any line X is single-peaked.*

Proof (see Figure 2): For any line, its intersection with R^m (a compact, convex set) is itself compact and convex. Since u_i is continuous it has a maximum on this set (see Nikaido, 1972, Theorem 1.1). The uniqueness of the maximum follows from the strict quasi-concavity of u_i. Hence an induced ideal point, x^{*i}, exists and is unique. Let $x'' = \beta x + (1\text{-}\beta)x^{*i}$ for arbitrary $x \in X$. By construction, $u_i\ (x^{*i}) \geq u_i\ (x'')$ and, by strict quasi-concavity, $u_i\ (x') > u_i\ (x'')$ for $x' = \lambda x^{*i} + (1\text{-}\lambda)x''$, $\lambda \in (0,1)$. From the definition of x'', it follows that $x' = \lambda x^{*i} + (1\text{-}\lambda)\ [\beta x + (1\text{-}\beta)\ x^{*i}] = (1\text{-}\lambda)\ \beta x + [\lambda + (1\text{-}\lambda)\ (1\text{-}\beta)]x^{*i} = \alpha\ x + (1\text{-}\alpha)x^{*i}$ where $\alpha = (1\text{-}\lambda)\ \beta < \beta$. From the above definition, u_i is single-peaked. Q.E.D.

THEOREM 3.1: *Let* $X_j^* = \{x_j^{*1}, x_j^{*2}, \ldots, x_j^{*n}\}$ *be the set of* j^{th} *components from the induced ideal points of the* $i \in N$ *in the direction* e_j *from status quo* x°. *For one-dimensional jurisdictions, a germaneness rule for amendments, and any committee system,* x° *is a structure-induced equilibrium if, for all j,*

$$x_j^\circ = \text{median } X_j^*. \tag{3.1}$$

Proof: From Lemma 3.1, the u_i are single-peaked on any line of the form $X = \{x/x = x^\circ + \lambda e_j\}$. From Black's well-known theorem on single-peaked preference representations, if $x_j^\circ = \text{median } X_j^*$ then x° defeats all points in X. If condition (3.1) holds for all j, then, given the jurisdictional constraint and the germaneness rule for amendments, x° is invulnerable. From the earlier definition, it is a structure-induced equilibrium. Q.E.D.

The theorem establishes that condition (3.1) is *sufficient* for x° to

FIGURE 2

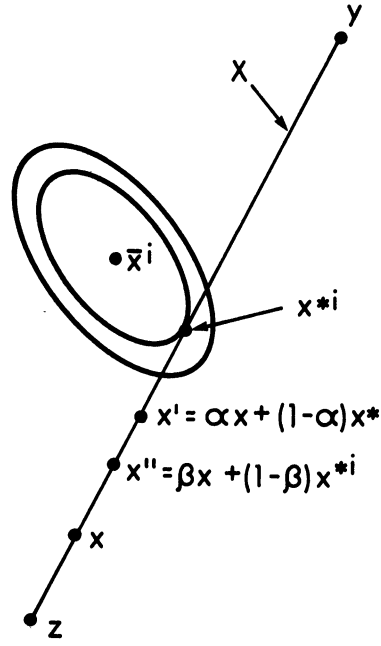

be an equilibrium when the jurisdictions are the individual basis vectors and a germaneness rule governs amendments. It is not a necessary condition, as the following corollary suggests and Theorem 3.2 proves.

> COROLLARY 3.1: *(3.1) is necessary condition for x° to be a structure-induced equilibrium under the committee-of-the-whole arrangement.*

The proof is omitted. The corollary suggests that not only must a preferred alternative to x° exist for the latter to be vulnerable; it must be *proposed* by a committee with appropriate jurisdiction or "reached," via the amendment process, from an appropriate committee proposal. Under the committee-of-the-whole procedure, x° is a structure-induced equilibrium only if (3.1) holds, since $x^\circ_j \neq$ median X_j^* implies there exists a $y = x^\circ + \lambda\, e_j$ with $y_j =$ median X_j^* and any member of at least a simple majority of N eligible to propose it—i.e. the "committee" (N, itself) will approve $y = (x_1^\circ, \ldots, y_j, \ldots, x_m^\circ)$ which, in turn, is passed over x° by the parent organization (again N).

The full implications of the veto-power of committees, and consequently their capacity to create equilibria, are provided in Theorem 3.2. Let

$$S_j = \{x | x = x^o + \lambda e_j, \lambda \neq 0, x = C_j\ (x,x^o)\}$$

be the set of modifications of x^o in its jurisdiction preferred to the status quo by C_j. From the strict quasi-concavity of the u_i, $i \in C_j$, and Lemma 3.1, it is straightforward to show that S_j is an open interval (possibly degenerate) for $C_j\ (\cdot\ ,\ \cdot)$ the simple majority rule for committee j. Similarly, let

$$T_j = \{x | x = x^o + \lambda e_j, \lambda \neq 0, x = C\ (x,x^o)\}$$

be the set of modifications in x^o along e_j preferred by N. Finally, define

$$R_j\ (x) = \begin{cases} M\ (x)\ \cup\ \{x\} & \text{if } x \in S_j \\ \emptyset & \text{if } S_j = \emptyset \end{cases}$$

Now we may state

THEOREM 3.2: *For the jurisdictional arrangement consisting of the basis vectors of R^m and a germaneness rule for amendments, x^o is a structure-induced equilibrium if and only if, for every j and every $x \in S_j$,*

$$R_j\ (x)\ \cap\ T_j = \emptyset.$$

PROOF: (1) Necessity. Suppose $x' \in R_j\ (x)\ \cap\ T_j$. Since $R_j\ (x)$ is the union of two sets (it cannot be empty under the supposition) there are two cases to consider: (i) $x' = x$ and (ii) $x' \in M\ (x)$. We establish necessity for (i); it also holds for (ii) but the proof is omitted here. Thus, if $x' = x$, then there exists an $x \in S_j\ \cap\ T_j$. $x \in S_j \rightarrow x \in g\ (C_j), x = C_j\ (x,x^o)$. $x \in T_j \rightarrow x = C\ (x,x^o)$. Therefore, according to (2.1), either x is a replacement for x^o or there is an $x' \in M(x)$ with $x' \in C\ (x', x)\ \cap\ C\ (x', x^o)$, i.e., x' defeats both x and x^o. In either case, x^o is vulnerable. It is, therefore, not a structure-induced equilibrium and necessity is established.
(2) Sufficiency. Suppose x^o is not a structure-induced equilibrium. Then x^o is vulnerable. Then either there exists a C_j and an $x \in g\ (C_j)$ satisfying (2.1)—that is, a replacement for x^o—or there exists a C_j and an $x \in g\ (C_j)$ with an "amended version" $x' \in M\ (x)$ such that $x' \in C(x, x')\ \cap\ C(x', x^o)$. In either case, there is a C_j and an $x \in S_j$

for which $R_j(x) \cap T_j \neq \emptyset$. Sufficiency is established. Q.E.D.

It should be noted that Theorem 3.1 is, in fact, a direct consequence of Theorem 3.2, so that the latter may be regarded as a generalization of the former to any $C = \{C_j\}$. In particular, if $x^\circ{}_j = \text{median } X_j{}^*$ for all j, then $T_j = \emptyset$ and the condition of Theorem 3.2 is satisfied, independent of the committee structure or of the recommendations of any $C_j \in C$. In effect, Theorem 3.1 identifies x° as an equilibrium when it is a "partial median" in the sense of Hoyer and Mayer (1974).[7] In their Theorem 2, however, they prove that a partial median, in the absence of jurisdictional restrictions on comparisons, is an equilibrium *only if* it is a *total median*—the median in *every* direction, not just in the directions of the basis vectors. And, in order for a total median to exist, a strong symmetry of preferences—a condition formulated elegantly by Slutsky (1977b)—is required. Jurisdictional restrictions on comparisons obviate this *necessity*—if preferences exhibit symmetry *within* jurisdictions (and they always will with undimensional jurisdictions), then x° is an equilibrium. This is precisely what Theorem 3.1 tells us.

Further consequences of Theorem 3.2 are instructive:

COROLLARY 3.2: *x° is a structure-induced equilibrium whenever $S_j = \emptyset$ for all j. In this case the $C_j \in C$ are veto groups.*

COROLLARY 3.3: *If $M(x)$ entails only germaneness and $S_j \neq \emptyset$, then x° is a structure-induced equilibrium if and only if $x^\circ = \text{median } X_j{}^*$.*

Corollary 3.2 indicates the real import of structural arrangements. If, for no $\lambda \neq 0$, there is an $x = x^\circ + \lambda e_j$ which a majority of C_j prefers to x°—that is, if $x^\circ{}_j = \underset{i \in C_j}{\text{median}} \{x_j{}^{*i}\}$—then x° is invulnerable in the jth direction. The normative import of C_j "keeping the gates closed" in its agenda role for the parent organization depends, in some sense, upon the deviation between median $X_j{}^*$ and $\underset{i \in C_j}{\text{median}} \{x_j{}^{*i}\}$. Example 3.1 suggests that if there are distinct biases in the committee assignment process, this deviation can be considerable.

[7] Hoyer and Mayer define a *partial median* in terms of any basis for R^m. A point is a partial median if it is the median along each of the m lines defined by the basis vectors. The one-dimensional jurisdictional arrangements are such a basis. Also see Davis, Hinich and Ordeshook (1970).

FIGURE 3

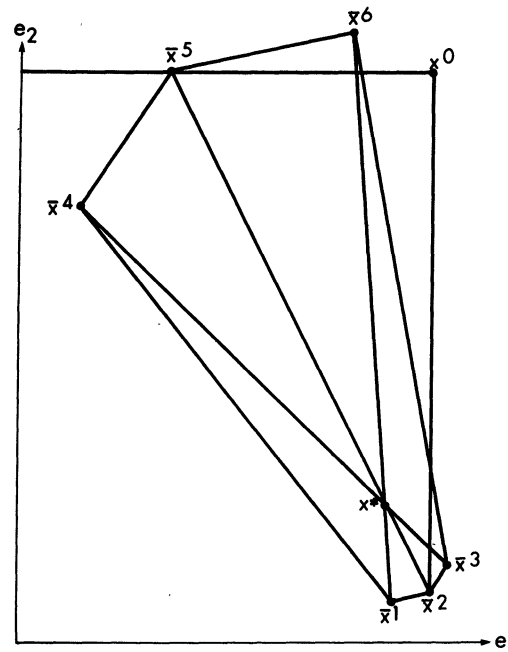

Example 3.1: In Figure 3 there are six voters with circular indifference contours and ideal points as indicated. The point x^* *is* a total (and hence a partial) median—for any vector originating at x^*, at most three voters prefer a point along that direction over x^*; x^* is a weak equilibrium in the sense of the definition in section 1 and Theorem 1.1. Suppose now that there is a committee system $C = \{C_1, C_2\}$, with $C_1 = \{1, 2, 3\}$, $C_2 = \{4, 5, 6\}$ and $f(C_1) = e_1$, $f(C_2) = e_2$. The point $x^\circ = (\bar{x}_1^2, \bar{x}_2^5)$ is a structure-induced equilibrium (so is x^*), since both committees will "keep the gates closed"—$S_1 = S_2 = \emptyset$. Also note that x° does not lie in the convex hull of the six ideal points—the Pareto set.

In the same fashion that Theorem 3.2 generalizes Theorem 3.1, Corollary 3.2 stands as a generalization of Corollary 3.1. In particular, the only way for $S_j = \emptyset$ to hold under the committee-of-the-whole committee system is when (3.1) is satisfied.

From Theorem 3.2, it is apparent that a structure-induced equilibrium may satisfy $R_j(x) = \emptyset$ for some j and $T_j = \emptyset$ for other j. That is, $x_j^\circ =$ median X_j^* for some j and $x_k^\circ =$ median $\{x_k^{*i}\}$ for all remaining k. If each
$i \in C_k$

$C_j \in C$ has a uniquely defined median in the jth direction, and N has a unique median X_j^* for each j, then there are as many as 2^m structure-induced equilibria (under the germaneness rule and simple jurisdictions).

Example 3.2: In Figure 4, $C_1 = \{1, 2, 3\}$ has jurisdiction e_1 and $C_2 = \{4,5,6,7\}$ has jurisdiction e_2, and each $i \in N$ has circular indifference contours and ideal point as illustrated. Point C is the point at which $T_j = \emptyset$ for all j; point B has the property that $S_j = \emptyset$ for all j; points A and D mix these properties—A has $S_2 = T_1 = \emptyset$ and D has $S_1 = T_2 = \emptyset$. Note that two of the four equilibria are not Pareto optimal and that none of four are, in any sense, "centrally" located.

Finally, if either committee or parent organization median in any jurisdiction is nonunique, there will be a dense set of equilibria associated with that jurisdiction; instead of point A,B,C,D, as in Figure 4, there will be regions.

Example 3.3: In Figure 5, $N = \{1, \ldots, 8\}$, $C_1 = \{1, \ldots, 4\}$, $C_2 = \{5, \ldots, 8\}$, each $i \in N$ has circular indifference contours with ideal point as indicated, and the jurisdictions of C_1 and C_2 are e_1 and e_2, respectively.

FIGURE 4

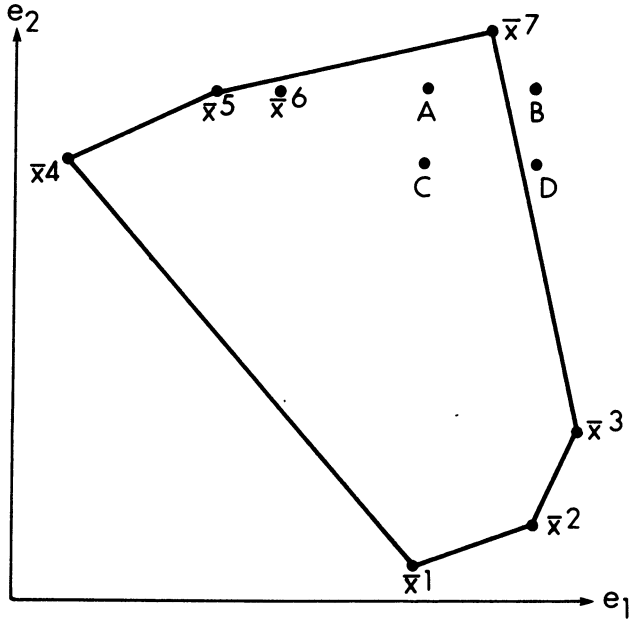

FIGURE 5

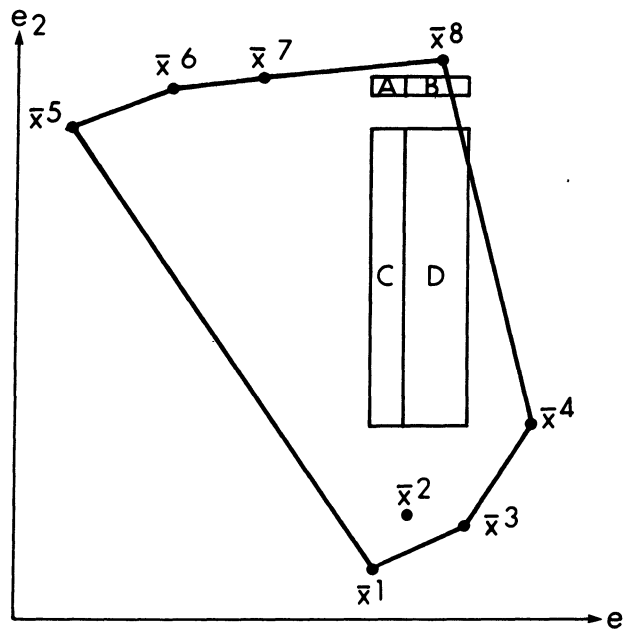

The regions A,B,C,D are the structure-induced equilibria for this problem (their descriptions parallel those in Example 3.2). In contrast to the previous example, "almost all" of the structure-induced equilibria are Pareto optimal. Indeed, a substantial proportion of the Pareto surface consists of equilibria.

Corollary 3.3 strengthens Theorem 3.1 and generalizes Corollary 3.1. It strengthens Theorem 3.1 in the sense that, under a germaneness rule for amendments, unless a $C_j \in C$ is at a maximal element along e_j distinct from median X_j^* (in which case $S_j = \emptyset$), then condition (3.1) is *necessary* as well as sufficient. It generalizes Corollary 3.1 by providing the condition, *viz.* $S_j \neq \emptyset$, that renders (3.1) necessary for equilibrium for arbitrary committee systems (not just the committee-of-the whole arrangement).

Corollary 3.3, however, does strain the assumption of nonsophisticated behavior by committees. In particular, it is entirely imaginable that a highly unrepresentative committee's efforts to move the status quo along the line $x^\circ + \lambda e_j$ to the point $x' = x^\circ + \lambda' e_j$ will backfire in that its proposal will be amended under the germaneness rule to $x'' = x^\circ + \lambda'' e_j$

and passed by N, where $x' \underset{C_j}{>} x^\circ \underset{C_j}{>} x''$ ($\underset{C_j}{>}$ is $>_i$ for all $i \in C_j$). There are, then, occasionally strong disincentives to proceed sincerely in revealing that, in fact, $S_j \neq \emptyset$. More precisely, whenever x° lies between the maximal elements[8] of C_j and N along $x^\circ + \lambda e_j$, sincere behavior by C_j is penalized. However, only under rather strong assumptions about information (knowing, for instance, the distribution of preferences of the parent body on the issue at hand) do the incentives for nonsincere behavior become unequivocal. While much is made in the Congressional literature of the wily, sophisticated, committee chairman, antenna carefully attuned to the "will" of the House, e.g. Wilbur Mills of the House Ways and Means Committee (see Manley, 1969), the representativeness of this caricature is in some doubt.

4. Simple Jurisdictions and Germaneness: Existence of Equilibrium

The results of the previous section provide some of the characteristics of structure-induced equilibria when they exist. In this section we establish their existence. Unlike preference-induced equilibrium, their existence does *not* depend upon a knife-edge assumption about the distribution of preferences.

In order to illustrate the existence result it is useful to distinguish between $\bar{x}_j^i$ and x_j^{*i}. The former is the jth component of i's ideal point; it is independent of x°, the status quo, and always exists. The latter is the solution to the following *maximization problem:*

$$\text{Find } x^{*i} \text{ such that } u_i\,(x^{*i}) = \underset{j}{\text{Max}}\,[u_i(x^\circ_1, x^\circ_2, \ldots, x^\circ_{j-1}, x_j, x^\circ_{j+1}, \ldots, x^\circ_m) \tag{4.1}$$

That is, x_j^{*i} is the jth component of the *induced ideal point* in the jth jurisdiction when the levels for all other dimensions are maintained as in the status quo. For many of the examples of the last section, in which individuals were assumed to have circular indifference contours, $x_j^{*i} = \bar{x}_j^i$. This equality, called *separability*, holds under more general conditions, and implies that preference as between two points that differ in at most one jurisdiction is independent of the *levels* of variables in other jurisdiction. For the case of general jurisdictions, separability is defined as follows:

[8] Along any line in R^m, the majority rule choice function is transitive, owing to the single-peakedness of the $\geq_i$; since R^m is compact, the choice function has a maximal element.

DEFINITION: *Let an arbitrary jurisdiction consist of* $\{e_1, \ldots, e_j\}$. *Furthermore, define the following points:*

$$x = (x_1, \ldots, x_j, z_{j+1}, \ldots, z_m)$$
$$y = (y_1, \ldots, y_j, z_{j+1}, \ldots, z_m)$$
$$x' = (x_1, \ldots, x_j, z_{j+1}', \ldots, z'_m)$$
$$y' = (y_1, \ldots, y_j, z'_{j+1}, \ldots, z'_m).$$

A preference representation u_i *is separable by jurisdiction if and only if* $u_i(x) \geq u_i(y) \rightarrow u_i(x') \geq u_i(y')$.

This concept will be utilized in the corollary to the existence theorem below.

The issue of existence of a structure-induced equilibrium reduces to the following question: Does a point exist that is simultaneously invulnerable in all jurisdictions? Theorem 4.1 answers this question in the affirmative.

THEOREM 4.1 *(Existence): If the preferences of each* $i \in N$ *are representable by a strictly quasi-concave, continuous utility function, if the basis vectors of* R^m *constitute committee jurisdictions, and if a germaneness rule governs the amendment process, then structure-induced equilibria exist.*

We prove this theorem shortly. In order to obtain some intuition about the theorem and its proof, we first establish the following corollary:

COROLLARY 4.1: *If the preferences of each* $i \in N$ *are representable by a strictly quasi-concave, continuous utility function separable by jurisdiction, if the basis vectors of* R^m *constitute committee jurisdictions, and if a germaneness rule governs the amendment process, then a vector of medians* $\mu = (\mu_1, \mu_2, \ldots, \mu_m)$, *where* $\mu_j =$ *median* $\{\bar{x}_j^1, \bar{x}_j^2, \ldots, \bar{x}_j^n\}$, *exists and is a structure-induced equilibrium.*

Proof: The median vector μ exists since, by construction, $\bar{x}^i$ exists for each $i \in N$ (a strictly quasi-concave, continuous function has a maximum on a compact set) and the median of a well-ordered finite set exists (though it need not be unique). From Theorem 3.1, $\mu^* = (\mu_1^*, \mu_2^*, \ldots, \mu_m^*)$, where $\mu_j^* =$ median $\{x_j^{*1}, x_j^{*2}, \ldots, x_j^{*n}\}$, is a structure-induced equilibrium. But, by jurisdictional separability, $\bar{x}_j^i = x_j^{*i}$ so that $\mu = \mu^*$. Thus μ is a structure-induced equilibrium and, as demonstrated above, μ exists. Q.E.D.

In effect this corollary states that when preference "types" are restricted to those representable by a utility function separable by jurisdiction (essentially either spherical indifference contours or ellipsoids the major and minor axes of which are parallel to the basis vectors), then a structure-induced equilibrium exists. In this instance, *jurisdictional arrangements not preference distributions create equilibrium.* This stands in stark contrast to the strict requirements on preferences required for a preference-induced equilibrium. The restriction of preference "types" in corollary 4.1 inherent in the separability condition confuses the issue because the conclusion generalizes to a much broader class of preference characteristics. This is the import of Theorem 4.1 which we now prove.

The strategy for proving Theorem 4.1 is first indicated. For any jurisdiction e_j the maximization problem (4.1) is solved for each $i \in N$ for all combinations of levels for other jurisdictions. This traces out the $X_j{}^{*i}$ surface for each $i \in N$ and $e_j \in E$. The strict quasi-concavity and continuity of the u_i and the compactness of R^m imply that (4.1) has a unique solution. From these surfaces, the median in the jth jurisdiction $X_j{}^M =$ median $\{X_j{}^{*1}, \ldots, X_j{}^{*n}\}$ may be traced. The intersection of the $X_j{}^M$ surfaces $j = 1, \ldots, m$, is a structure-induced equilibrium.

Example 4.1: The procedure is illustrated for three individuals and two dimensions in Figure 6, parts (a) and (b). For various levels on the e_2 dimension, each i's solution to the maximization problem (4.1), based on his indifference curves in part (a), traces out his most-preferred level on the e_1 dimension. These are drawn in part (b) as $X_1{}^{*1}$, $X_1{}^{*2}$, and $X_1{}^{*3}$. Notice that Mr. 3, whose preferences are separable, prefers a fixed level on e_1, no matter what the e_2 level. By a similar procedure, for various e_1 levels, the maximization problem yields a solution in e_2, tracing out the curves $X_2{}^{*1}$, $X_2{}^{*2}$, $X_2{}^{*3}$. For various levels of e_2, $\underset{i \in N}{\text{median}}\, X_1{}^{*i} = X_1{}^M$ and, for various levels of e_1, $\underset{i \in N}{\text{median}}\, X_2{}^{*i} = X_2{}^M$. These are simply segments of the individual curves. The point $x^\circ \in X_1{}^M \cap X_2{}^M$ is the unique point of intersection. From the definition of the $X_j{}^M$ curves, it is obvious that x° is a structure-induced equilibrium—since it lies on both median curves it is invulnerable in both jurisdictions. Notice, in part (a), the disparity between x° and μ (the vector of medians of the ideal points). When separability does not hold (only Mr. 3 has separable preferences), μ no longer has equilibrium properties.

The proof of Theorem 4.1, then, requires that we establish a non-empty intersection for the $X_j{}^M$ surfaces. In Figure 6 there is a singleton

FIGURE 6

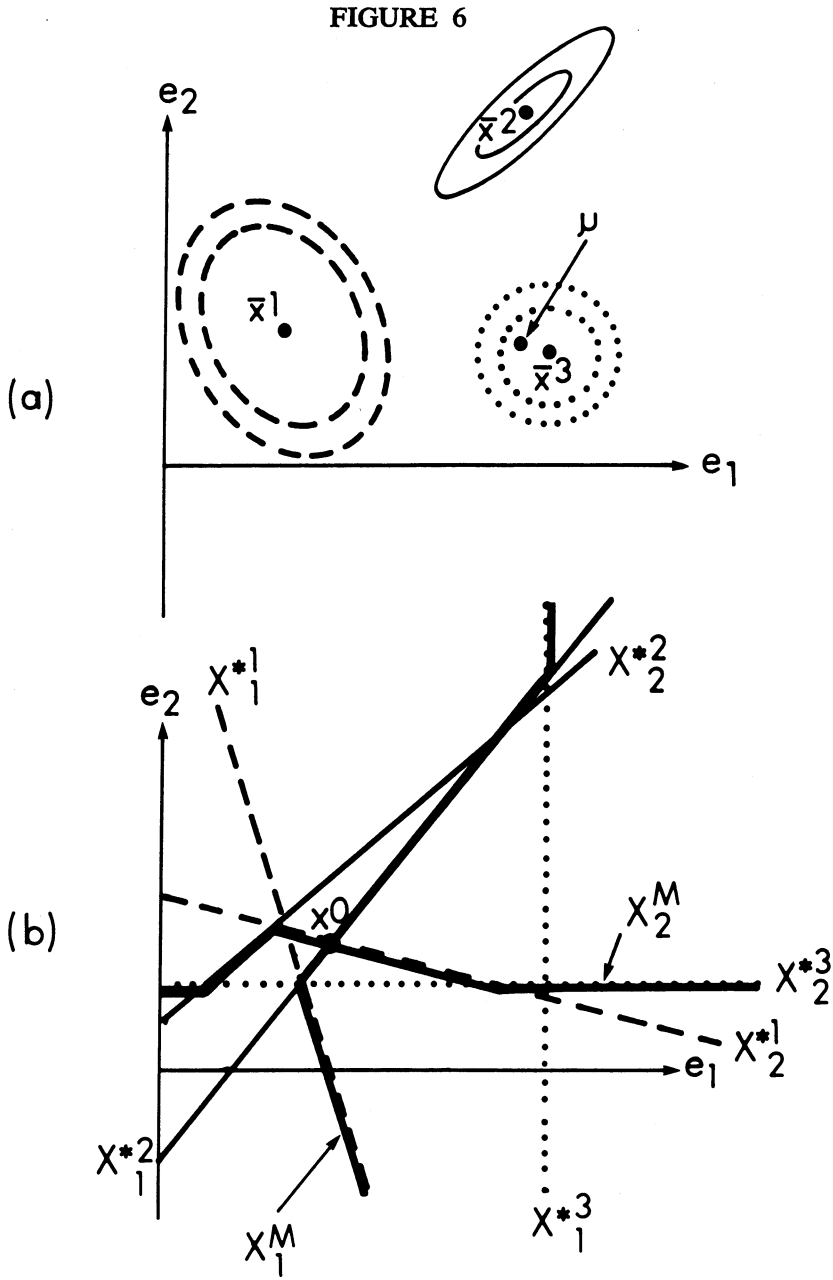
(a)
e_2
$\bar{x}2$
μ
$\bar{x}1$
$\bar{x}3$
e_1
(b)
e_2
X^{*1}_1
X^{*2}_2
$x0$
X^M_2
X^{*3}_2
X^{*1}_2
e_1
X^{*2}_1
X^M_1
X^{*3}_1

intersection; this follows from the fact that, in that particular example, the median mappings $X_1^M : e_2 \rightarrow e_1$ and $X_2^M : e_1 \rightarrow e_2$ are single-valued. However, X_j^M need not be single-valued (even though the individual maximization surfaces, X_j^{*i}, are). X_j^M, that is, is generally a *correspondence*, as illustrated in Figure 7, a contingency that may occur, for example, when there are an even number of voters. In this case the equilibria are *weak* (see section 1).

The proof of Theorem 4.1 is facilitated by three lemmas.

LEMMA 4.1: *X_j^{*i} is continuous and single-valued for each $i \in N$ in each $e_j \in E$.*

Proof: X_j^{*i} is the function which graphs solutions to the maximization problem (4.1), for $i \in N$, for all combinations of levels of e_k $(k \neq j)$. Since u is *strictly* quasi-concave, X_j^{*i} is single-valued. Since u_i is continuous, so is the solution to (4.1). Q.E.D.

LEMMA 4.2: *X_j^M is upper semicontinuous for all j. If it is single-valued, then it is continuous.*

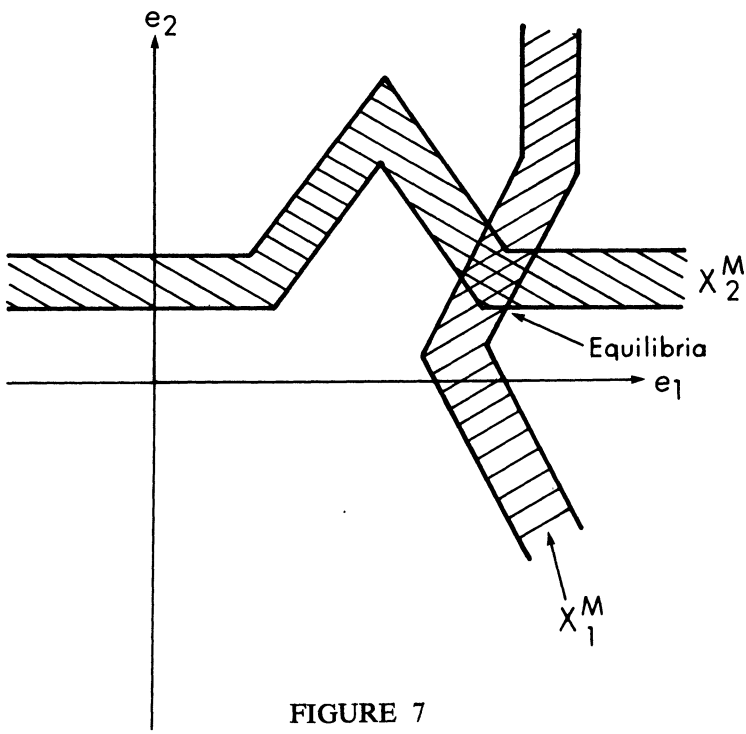

FIGURE 7

The proof is omitted, but several remarks are made. Whenever, for any combination of levels on other dimensions, there is an odd number of distinct images of the $X_j{}^{*i}$, then there will be a unique median—$X_j{}^M$ will be single-valued for that combination of levels on other dimensions (See Figure 6). $X_j{}^M$ will simply be "pieces" of continuous functions (the $X_j{}^{*i}$'s). It is clearly continuous along each piece, as well as where two pieces "join." Hence it is everywhere continuous. Even in those instances where $X_j{}^M$ is a correspondence, mapping a particular combination of levels on other dimensions into a range of points along e_j, that range will be closed. Hence it is upper semicontinuous.[9]

LEMMA 4.3: $\bigcap_j X_j{}^M \neq \emptyset$.

Proof: The argument behind this proof exploits well-known fixed point theorems. In particular, if the $X_j{}^M$ are continuous and single-valued and R^m is compact, then the conditions of the Brouwer Fixed Point Theorem are met. This theorem implies the existence of a fixed point, i.e. a nonempty intersection of the $X_j{}^M$. If, on the other hand, the $X_j{}^M$ are upper semi-continuous correspondences, and R^m is compact, then the conditions of the Kakutani Fixed Point Theorem are met, implying a nonempty intersection.[10] Q.E.D.

Proof of Theorem 4.1

Lemmas 4.1–4.3 guarantee the existence of points in $\bigcap_j X_j{}^M$. Let x be one of those points. Consider $x' = x + \lambda e_{j'}$, for any j'. $x \in \bigcap_j X_j{}^M \rightarrow x \in X_{j'}{}^M$. From Lemma 3.1, the u_i are single-peaked on $x + \lambda e_{j'}$. Therefore, $x \in X_{j'}{}^M \rightarrow x = C\ (x, x')$ for all $j \rightarrow x$ is invulnerable $\rightarrow x$ is a structure-induced equilibrium. Q.E.D.

The main point of this essay has now been established. *Jurisdictional arrangements and rules of procedure (amendment control) create equilibrium.* Theorem 4.1 provides the grounds for concluding that a social

[9] *Upper semi-continuity* is defined in most topology and mathematical economics texts, e.g., Berge (1963, p. 109), and Nikaido (1968, p. 65). A correspondence $\Phi : X \rightarrow Y$ (Y compact) is said to be upper semi-continuous if $\{x^i\}$ is a sequence in X with $x^i \rightarrow x$ and $\{y^i\}$ is a sequence in Y such that $y^i \in \Phi\ (x^i)$ and $y^i \rightarrow y$ implies $y \in \Phi\ (x)$. This is equivalent to requiring the graph of $\Phi(x)$ to be closed—see Figure 7.

[10] After constructing this argument I discovered it was nearly identical to a result proved elegantly by Kramer (1972), Theorem 1′, though for different purposes. The details of the proof are found there.

choice arrangement consisting of *any* collection of individual preferences, each representable by a continuous, strictly quasi-concave utility function, possesses an equilibrium state under majority rule. This is true for *any* committee system for which the jurisdictions are single-dimensional and a germaneness rule for amendments is in effect.

This result can be extended modestly as follows:

COROLLARY 4.2: *If X_j^M is single-valued for all j, then the X_j^M intersect in a unique point and that point is a strong equilibrium.*

The uniqueness of the intersection does *not* imply that it is a unique structure-induced equilibrium. Let $\{x\} = \bigcap_j X_j^M$, with $x = (x_1, \ldots, x_m)$ and, by definition of X_j^M, $x_j = \underset{i \in N}{\text{median}} \{x_j^{*i}\}$.

Let $y_j = \underset{i \in C_j}{\text{median}} \{x_j^{*i}\}$ and $y = (x_1, \ldots, x_{j-1}, y_j, x_{j+1}, \ldots, x_m)$. The point *may* be a structure-induced equilibrium. Certainly if preferences are separable by jurisdiction then y *is* a structure-induced equilibrium. The fact we exploited in establishing existence is that there is always a point from which no majority of the *parent organization* desires change (in any jurisdictionally permissible direction). From Theorem 3.2 and its corollaries, however, we know that equilibria may arise for other reasons.

A final generalization is suggested by some earlier work of Slutsky (1975, 1977a). Let $V = \{v_1, \ldots, v_k\}$ be any collection of linearly independent vectors in R^m. From linear independence, $k \leq m$. The $v_j \in V$ are permissible directions of change.

COROLLARY 4.3: *If the preferences of $i \in N$ are representable by a continuous, strictly quasi-concave utility function in the subspace of R^m spanned by the $v_j \in V$, if the v_j constitute jurisdictions, and if a germaneness rule governs amendments, then*

(i) *structure-induced equilibria exist, and*
(ii) *a point x° is a structure-induced equilibrium if and only if, for all $v_j \in V$ and all $x \in S_j$, $R_j(x) \cap T_j = \emptyset$ (where R_j, S_j, and T_j, are defined as in Theorem 3.2).*

5. Discussion

In this concluding section there are several loose ends to be dealt

with. First, the question of sensitivity is raised. The model of social choice offered in this paper is more institutionally detailed than its predecessors. Indeed, that is the central thrust of the paper—institutional details matter. But how much? How sensitive is the existence of equilibrium and its properties to the specifics of institutional arrangements? This raises a second, related question. What are the effects of institutional "reforms"? In particular, and this is the obverse of the previous question, under what conditions are equilibria invariant under institutional "reforms"? Finally, the prospects for exploiting the general framework of section 2 to establish results for more complex or troublesome institutional arrangements are briefly explored.

Robustness of Structure-Induced Equilibria

With single-dimensional jurisdictions and a germaneness rule governing the amendment process, any collection of voters whose preferences are represented by strictly quasi-concave, continuous utility functions, and any committee system, yields structure-induced equilibria.

1. Existence is insensitive to changes in the distribution of ideal points or to changes in other properties of the utility functions: In contrast to preference-induced equilibrium, the existence of structure-induced equilibrium does not depend on preference distributions. Changes in preference distributions or other utility properties do not endanger the existence of equilibrium, though they may change its location (see below). Even some of the properties assumed above for the proof of existence—continuity and strict quasi-concavity of the u_i—may be relaxed to some degree so long as the upper semicontinuity of each X_j^M is preserved.

2. The location of structure-induced equilibria may depend on preference distributions: As Theorem 3.2 and its corollaries suggest, the equilibrium properties of a status quo, x°, depend on the relationship of its *jurisdictional projections,* x°_j, to $\underset{i \in N}{\text{median}} \{x_j^{*i}\}$ and $\underset{i \in C_j}{\text{median}} \{x_j^{*i}\}$. To the extent that changes in preference distributions alter either of these relationships, then the location of equilibrium shifts. However, distributional changes that leave these relationships intact will not affect the location of equilibrium.[11]

[11] These assertions, and those that follow, depend on the other conditions of the relevant theorems holding. In other words, this "sensitivity analysis" is conducted one condition at a time.

3. The existence of equilibrium does not depend upon the particular committee system $C = \{C_j\}$:

The point x with $x_j = \underset{i \in N}{\text{median}} \{x_j{}^{*i}\}$ always exists and is a structure-induced equilibrium, no matter what committee system is in effect. Particular committee systems produce *additional* equilibria, but associated with every committee system is the equilibrium point identified above.

4. The location of equilibrium is affected by the committee system in effect: Corollary 3.1 indicates that (3.1) is a necessary condition a point must satisfy in order to be an equilibrium under the committee-of-the-whole arrangement. It is *not* necessary under alternative committee arrangements. The set of equilibria associated with a given committee system is different from, though shares common elements with, the set of equilibria associated with some other committee system. In this sense, structural arrangements matter.

5. Both existence and location of equilibrium depend on the rule governing the amendment process: Consider the following straightforward result.

THEOREM 5.1: *If the conditions of Theorem 4.1 hold except that $M(x) = R^m$—the open rule—and if $S_j \neq \emptyset$ for some j, then x° is a structure-induced equilibrium if and only if it is a preference-induced equilibrium.*

For a given committee, C_j, $S_j \neq \emptyset$ whenever $x_j{}^\circ \neq \underset{i \in C_j}{\text{median}} \{x_j{}^{*i}\}$. With our assumption of nonstrategic behavior, if this condition holds for *any* C_j, then it will propose an alternative to x°. With $M(x) = R^m$, any amendment to the proposal, even a nongermane one, is in order. Thus, whenever $S_j \neq \emptyset$ for some C_j, committees and jurisdictions no longer serve to structure social comparisons. Social intransitivities are no longer mitigated by structural or jurisdictional arrangements. Generic cycling predominates unless the severe conditions that assure a preference-induced equilibrium prevail. The only role played by the structural arrangement is associated with the conditions $S_j = \emptyset$, *viz.*, if this holds, and only if this holds for all C_j, then structure-induced and preference-induced equilibria are not equivalent.

On the other hand, for the closed rule—$M(x) = \emptyset$—it may be

shown that structure-induced equilibria always exist and, in fact, those produced by the germaneness rule are a proper subset of those produced by the closed rule. The closed rule gives much stronger veto power to committees—a point recently examined by Romer and Rosenthal (forthcoming)—and, as a consequence, produces a large (and always nonempty) equilibrium set.[12]

6. Both existence and location of equilibrium depend on the jurisdictional arrangement: The unidimensional nature of jurisdictions has permitted us to exploit the "good behavior" of simple majority choice functions when individual preferences are single-peaked. Now consider the following extreme, but otherwise straightforward result.

THEOREM 5.2: *If the conditions of Theorem 4.1 hold except that, for a particular* $C_j \in C$, $f(C_j) = \{e_1, \ldots, e_m\}$ *(that is,* $g(C_j) = R^m$*), then, if* $S_j \neq \emptyset$ *for this* C_j*, then* x° *is a structure-induced equilibrium if and only if it is a preference-induced equilibrium.*

This result once again underscores the important "channeling" role played by jurisdiction (and structure). If the binary comparisons the parent organization is allowed to make are not sufficiently restricted then the prospects for equilibrium increasingly depend upon preference distribution requirements. In the extreme (Theorem 5.2), they are necessary and sufficient. One line of inquiry worth pursuing is the nature of cycling as a function of jurisdictional restrictions; this line has been pursued, in the absence of any jurisdictional considerations, by McKelvey (1976, 1977), Cohen (1977), and Schofield (1977).

This brief treatment of robustness suggests that, even when structural and jurisdictional matters are given more attention, equilibrium is still a delicate affair. The results of section 2, 3, and 4 need to be generalized, a point we turn to shortly. In another sense, however, the lack of robustness further underscores the main thesis offered here. Structural and jurisdictional arrangements offer the prospect of equilibrium; they are alterable properties of institutions (as preferences probably are not) and thus are potential instruments of equilibrium (disequilibrium) in the hands of institutional designers; and finally, even if they do not assure equilibrium, they undoubtedly affect (constrain) the form of disequilibrium.

[12] For a comparison of amendment rules, see Shepsle (1978).

Structure-Induced Equilibrium and Institutional Reform

Traditional social choice theory, to the extent that its main elements are limited to individual preferences, a preference aggregation mechanism, and decisive coalitions, is unlikely to have much bearing on substantive debates about institutional reform. The latter deal mostly with the structure of choices permitted an organization (as well as its decisive coalitions) (see Rohde and Shepsle, 1978). Hence a theory which elevates institutional features is to be welcomed if it can contribute to these debates an understanding of how institutional practices work (and to whose advantage). While I do not claim to have provided this theory, the structure offered in section 1, or some variation, is one promising line of attack. For now let me focus on one issue involving institutional reform.

In both houses of the United States Congress, the last few years have witnessed the salience of jurisdictional realignments for standing committees. To obtain some purchase on this problem, consider the jurisdictional arrangement $J^\circ = \{J_k\}$, with each $J_k \in J^\circ$ a single basis vector in $E^\circ = \{e_1, \ldots, e_m\}$. Associate, under the conditions of Theorem 4.1, a structure-induced equilibrium, x°. Question: What happens when each jurisdiction vector is rotated by θ degrees? Call the associated jurisdictional arrangement, basis, and equilibrium, respectively, J^θ, E^θ and x^θ. From Corollary 4.3, x^θ exists. But what is the relationship of x^θ to x°? We have the following result:

THEOREM 5.3: *If the conditions of Theorem 4.1 hold, and if x° is a preference-induced equilibrium, then it is invariant under jurisdictional rotations.*

A preference-induced equilibrium (which is a structure-induced equilibrium—see Theorem 2.1) remains one under rotations of jurisdictional vectors; it depends in no way on jurisdictional arrangements. In general, however, $x^\circ \neq x^\theta$. Letting ϵ: $J \rightarrow R^m$ be the correspondence which associates the equilibrium state(s) identified in Theorem 4.1 with jurisdictional arrangement J, the following question is posed: Under what conditions does ϵ possess continuity-like properties? That is, for example, when is $\lim_{\theta \rightarrow 0} \epsilon(J^\theta) = \epsilon(J^\circ)$?[13] Put in substantive terms, this sort of question seeks to distinguish the class of jurisdictional reforms that have an impact on outcomes from those that are merely cosmetic.

[13] One could pose a related question for the correspondence ϵ' that associates *all* the structure-induced equilibria of a particular jurisdictional arrangement.

Concluding Observations

The theoretical concepts of section 1 have been offered in order to elevate institutional properties in the debate on social choice. The overly atomistic representations of traditional social choice theory and general equilibrium theory are troublesome to political scientists who see a world of individuals whose choices are constrained by the operating characteristics of political and economic institutions.[14]

Currently I am preparing papers on alternative amendment procedures (see Shepsle, 1978), complex jurisdictions, jurisdictional change, and hierarchies of decentralization. In each case the idea is to identify equilibria if they exist or to trace the path of disequilibrium if they do not. Underlying these projects is the expectation that weakening an otherwise rarely explored[15] axiom of Arrow—the Social Completeness Axiom—in the "right" way, and in effect capturing the ways in which institutional structure, jurisdiction, and other operating characteristics channel and constrain social comparisons, social choice in institutionally-rich contexts can be understood.

Manuscript submitted 20 December 1977
Final manuscript received 1 May 1978

REFERENCES

Arrow, Kenneth A. 1963. *Social choice and individual values.* 2nd ed. New York: Wiley.

Berge, Claude. 1963. *Topological spaces.* New York: Macmillan.

Cohen, Linda. 1977. The structure of maximum majority rule cycles. Paper presented at the Annual Meeting of the American Economic Association, New York, December 26–30, 1977.

Davis, Otto A., Melvin J. Hinich, and Peter C. Ordeshook. 1970. An expository development of a mathematical model of the electoral process. *American Political Science Review,* 64 (June 1970): 426–449.

Denzau, Arthur and Robert Parks. 1973. Equilibrium in an economy with private and spatial political dimensions. Paper presented at the Winter Meeting of the Econometrics Society, 1973.

Fishburn, Peter C. 1973. *The theory of social choice.* Princeton: Princeton University Press.

———. 1974. Impossibility theorems without the social completeness axiom. *Econometrica,* 42 (July 1974): 695–704.

[14] See my comments in Shepsle (1977).

[15] The one exception of which I am aware is Fishburn (1974).

Hoyer, R. W. and Lawrence S. Mayer. 1974. Comparing strategies in a spatial model of electoral competition. *American Journal of Political Science*, 18 (August 1974): 501–523.

Kramer, Gerald H. 1972. Sophisticated voting over multidimensional choice spaces. *Journal of Mathematical Sociology*, 2 (1972): 165–180.

———. 1973. On a class equilibrium conditions for majority rule. *Econometrica*, 2 (March 1973): 285–297.

McKelvey, Richard D. 1976. Intransitivities in multidimensional voting models and some implications for agenda control. *Journal of Economic Theory*, 12 (June 1976): 472–482.

———. 1977. General conditions for global intransitivities in formal voting models. Paper presented at Annual Meeting of the Public Choice Society, New Orleans, March, 1977.

——— and Richard E. Wendell. 1976. Voting equilibria in multidimensional choice spaces. *Mathematics of Operations Research*, 1 (May 1976): 144–158.

Manley, John. 1969. Wilbur D. Mills: A study in congressional influence. *American Political Science Review*, 63 (June 1969): 442–464.

Matthews, Steven. 1977. The possibility of voting equilibria. Unpublished paper, California Institute of Technology.

Nikaido, Hukukane. 1963. *Convex structures and economic theory*. New York: Academic Press.

Pattanaik, Prasanta K. 1971. *Voting and collective choice*. Cambridge: Cambridge University Press.

Plott, Charles R. 1967. The notion of equilibrium and its possibility under majority rule. *American Economic Review*, 57 (September 1967): 787–806.

Rohde, David W. and Kenneth A. Shepsle. 1978. Thinking about legislative reform. In Leroy Rieselbach, ed., *Legislative reform*. Boston: Lexington.

Romer, Thomas and Howard Rosenthal. Forthcoming. Political resource allocation, controlled agendas, and the status quo. *Public Choice*, (Winter 1978)

Schofield, Norman. 1977. Local acyclicity and the null dual set in dynamic games. Paper presented at Mathematical Social Science Board Conference on Game Theory and Political Science, Hyannis, Mass. July, 1977.

Sen, Amartya K. 1966. A possibility theorem on majority decisions. *Econometrica*, 34 (April 1966): 491–499.

———. 1970. *Collective choice and social welfare*. San Francisco: Holden-Day.

Shepsle, Kenneth A. 1977. The future of public choice: A political scientist's views. Banquet address, Meetings of the Public Choice Society, New Orleans, 1977.

———. 1978. Institutional structure and policy choice: Some comparative statics of amendment control procedures. Paper presented at Conference on Political Science and the Study of Public Policy, Hickory Corners, Michigan, May 1978 and at the Annual Meeting of the American Political Science Association, New York, September 1978.

Sloss, Judith. 1973. Stable outcomes in majority rule voting games. *Public Choice*, 15 (Summer 1973): 19–48.

Slutsky, Steven M. 1975. Majority rule and the allocation of public goods. Unpublished Ph.D. dissertation, Yale University.

———. 1977a. A voting model for the allocation of public goods: Existence of an equilibrium. *Journal of Economic Theory*, 14 (1977): 299–325.

———. 1977b. Equilibrium under plurality voting. Paper presented at Annual Meetings of the Public Choice Society, New Orleans, March, 1977.

Zeckhauser, Richard J. and Milton C. Weinstein. 1974. The topology of Pareto-optimal regions with public goods. *Econometrica*, 42 (July 1974): 643–666.